CONAIR®

HOSPITALITY

2017 Product Catalog

website

Please visit our website: www.conairhospitality.com

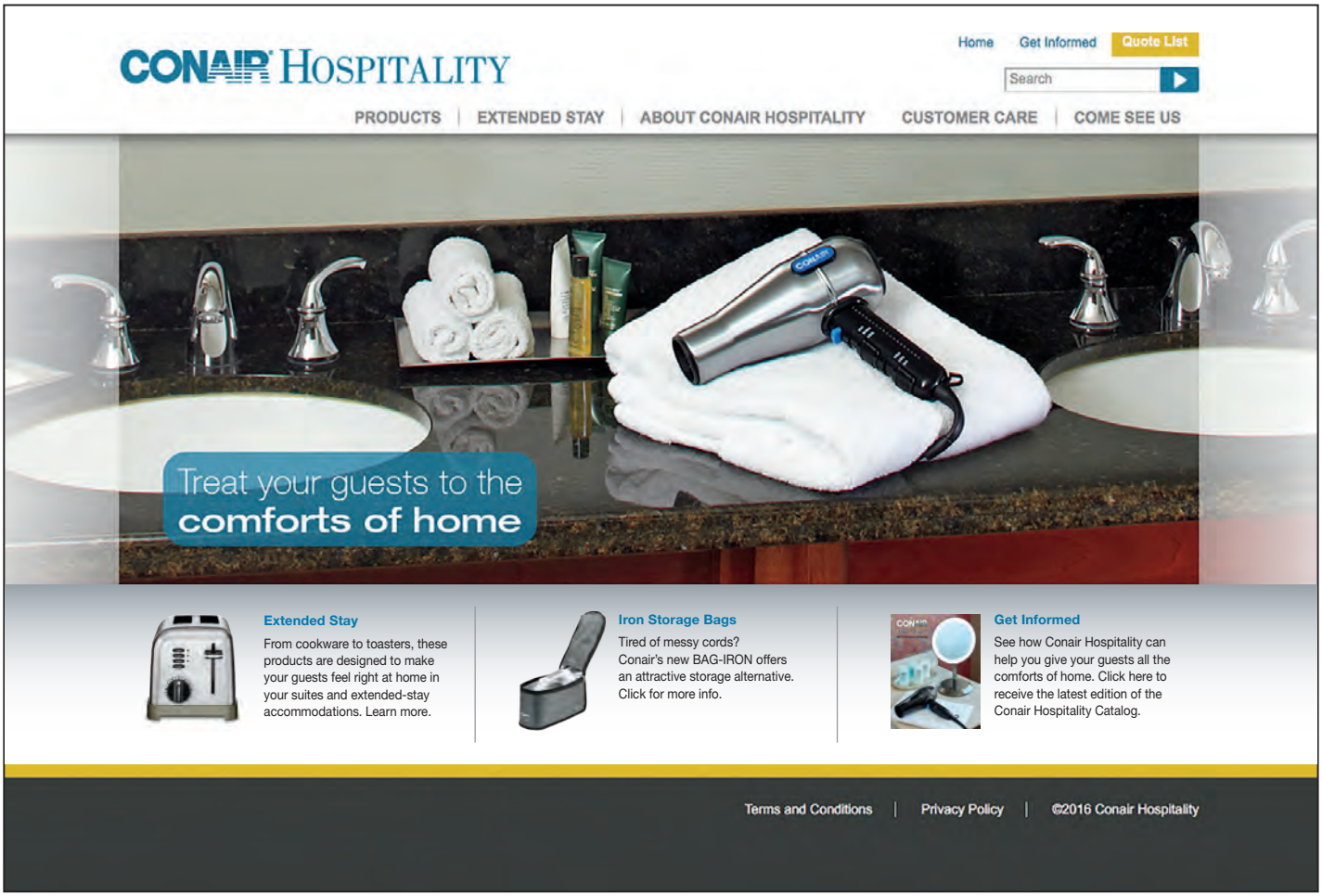

iPad®, iPhone® and iPod® are trademarks of Apple Inc., registered in the U.S. and other countries.

index

hair dryers PAGE 2

coffeemakers/ kettles PAGE 8

clock radios PAGE 12

irons/ steamer PAGE 14

mirrors PAGE 18

scales PAGE 22

extended stay PAGE 24

food service equipment PAGE 28

product specifications PAGE 30

hair dryers

NEW CONAIR® 1875 Watt Ionic Dryer

575WH

- Ionic Technology for Shiny, Healthy-Looking, Manageable Hair
- Long-Life AC Motor
- Full Salon Size
- Upscale Metallic Black Finish
- Independent Heat (3) and Speed (2) Controls
- Cool Shot Button
- Removable Filter
- Concentrator Attachment
- Storage Bag Available (BAG-HOSP)

See full specs for model 575WH on page 30.

NEW CONAIR® Infiniti Pro 1875 Watt Ionic Dryer with Brushless Motor

3QHW

- Ionic Technology for Shiny, Healthy-Looking, Manageable Hair
- Brushless Motor Provides Long Life and Reduced Drying Times
- Titanium Ceramic Technology
- Patent-Pending Noise-Reduction Technology
- Full Salon Size
- Independent Heat (3) and Speed (2) Controls
- Cool Shot Button
- Removable Filter
- Concentrator Attachment
- Storage Bag Available (BAG-HOSP)

See full specs for model 3QHW on page 30.

NEW CONAIR® 1875 Watt Soft Surface™ Dryer

294WH

- Ionic Technology for Shiny, Healthy-Looking, Manageable Hair
- Long-Life AC Motor
- Full Salon Size
- Soft-Touch Finish Resists Fingerprints
- Stylish Rose Gold Accents
- Independent Heat (3) and Speed (2) Controls
- Cool Shot Button
- Removable Filter
- Concentrator Attachment
- Storage Bag Available (BAG-HOSP)

See full specs for model 294WH on page 30.

NEW CONAIR® 1875 Watt Ionic Dryer

425WWH

- Ionic Technology for Shiny, Healthy-Looking, Manageable Hair
- Independent Heat (3) and Speed (2) Controls
- Cool Shot Button
- Removable Filter
- Concentrator Attachment
- Storage Bag Available (BAG-HOSP)

See full specs for model 425WWH on page 31.

NEW CONAIR® 1875 Watt Ionic Dryer

425BKWH

- Ionic Technology for Shiny, Healthy-Looking, Manageable Hair
- Independent Heat (3) and Speed (2) Controls
- Cool Shot Button
- Removable Filter
- Concentrator Attachment
- Storage Bag Available (BAG-HOSP)

See full specs for model 425BKWH on page 31.

NEW CONAIR® 1875 Watt Dryer with Ionic Conditioning

229WWH

- Ionic Conditioning Helps Fight Frizz and Brings Out Natural Shine
- 2 Heat/Speed Settings
- Cool Shot Button
- Concentrator Attachment
- Storage Bag Available (BAG-HOSP)

See full specs for model 229WWH on page 31.

NEW CONAIR® 1875 Watt Dryer with Ionic Conditioning

229BKWH

- Ionic Conditioning Helps Fight Frizz and Brings Out Natural Shine
- 2 Heat/Speed Settings
- Cool Shot Button
- Concentrator Attachment
- Storage Bag Available (BAG-HOSP)

See full specs for model 229BKWH on page 31.

CONAIR® 1875 Watt Brushed Metal Dryer

141WRW

- Upscale, Brushed Metal Barrel
- Full Salon Size
- Cool-Touch Surface
- Independent Heat (3) and Speed (2) Controls
- Cool Shot Button
- Removable Filter
- Concentrator Attachment
- Storage Bag Available (BAG-HOSP)

See full specs for model 141WRW on page 31.

CONAIR® 1875 Watt Chrome Dryer

070RACHNW

- Upscale Polished Chrome Barrel
- 2 Heat/Speed Settings
- Cool Shot Button
- Removable Filter
- Storage Bag Available (BAG-HOSP)

See full specs for model 070RACHNW on page 31.

hair dryers

CONAIR®
1875 Watt Ionic
Cord-Keeper® Dryer

169CHIW

- Ionic Technology for Shiny, Healthy-Looking, Manageable Hair
- Polished Chrome Barrel
- Retractable Power Cord Helps Provide a Neat Presentation
- Folding Handle for Easy Storage
- 2 Heat/Speed Settings
- Cool Shot Button
- Storage Bag Available (BAG-HOSP)

See full specs for model 169CHIW on page 32.

CONAIR®
1875 Watt Ionic
Cord-Keeper® Dryer

169WIW

- Ionic Technology for Shiny, Healthy-Looking, Manageable Hair
- Retractable Power Cord Helps Provide a Neat Presentation
- Folding Handle for Easy Storage
- 2 Heat/Speed Settings
- Cool Shot Button
- Storage Bag Available (BAG-HOSP)

See full specs for model 169WIW on page 32.

CONAIR®
1875 Watt Ionic
Cord-Keeper® Dryer

169BIW

- Ionic Technology for Shiny, Healthy-Looking, Manageable Hair
- Retractable Power Cord Helps Provide a Neat Presentation
- Folding Handle for Easy Storage
- 2 Heat/Speed Settings
- Cool Shot Button
- Storage Bag Available (BAG-HOSP)

See full specs for model 169BIW on page 32.

CONAIR®
1875 Watt
Soft Surface™ Dryer

152B

- Soft-Touch Finish Resists Fingerprints
- Compact Size for Easy Storage
- 2 Heat/Speed Settings
- Cool Shot Button
- Hinged Air Filter for Easy Cleaning
- Storage Bag Available (BAG-HOSP)

See full specs for model 152B on page 33.

CONAIR®
1875 Watt Dryer

247W – White
247BW – Black

- Compact Size for Easy Storage
- 2 Heat/Speed Settings
- Cool Shot Button
- Concentrator Attachment
- Choose from White or Black
- Storage Bag Available (BAG-HOSP)

See full specs for models 247W and 247BW on page 33.

CONAIR®
1600 Watt Dryer

047W – White
047BW – Black

- Compact Size for Easy Storage
- 2 Heat/Speed Settings
- Cool Shot Button
- Concentrator Attachment
- Choose from White or Black
- Storage Bag Available (BAG-HOSP)

See full specs for models 047W and 047BW on page 33.

CONAIR®
1600 Watt
Wall-Mount Dryer

134BW

- LED Nightlight
- Auto Shutoff When Handset Is Placed in Wall Mount
- 2 Heat/Speed Settings
- Easy to Install – Mounting Hardware Included
- 6-Foot Coil Cord from Wall Mount to Handset
- Removable Air Filter

See full specs for model 134BW on page 33.

CONAIR®
1600 Watt
Wall-Mount Dryer

134W
136W – Direct Wire Version

- LED Nightlight
- Auto Shutoff When Handset Is Placed in Wall Mount
- 2 Heat/Speed Settings
- Easy to Install – Mounting Hardware Included
- 6-Foot Coil Cord from Wall Mount to Handset
- Removable Air Filter

See full specs for models 134W and 136W on page 34.

CUISINART® 2-Cup Coffeemaker

WCM11

- **Brews One Cup (8 oz.) at a Time or Two Cups Simultaneously**
- **Uses Standard Single-Serve Coffee Pods – Cuisinart In-Room Coffee Program Available**
- **Environmentally Friendly – Reusable, Dishwasher-Safe Brew Basket**
- **Automatic Shutoff When Brew Cycle Is Complete**

See full specs for model WCM11 on page 35.

CUISINART® 2-Cup Stainless Coffeemaker

WCM11S

- Upscale, Stainless Steel Finish
- Brews One Cup (8 oz.) at a Time or Two Cups Simultaneously
- Uses Standard Single-Serve Coffee Pods – **Cuisinart In-Room Coffee Program Available**
- Environmentally Friendly – Reusable, Dishwasher-Safe Brew Basket
- Automatic Shutoff When Brew Cycle Is Complete

See full specs for model WCM11S on page 35.

CUISINART® 4-Cup Coffeemakers

WCM04B – Glass Carafe
WCM08B – Brushed Stainless Carafe

- Compact Design
- Brews Up to Four Cups (20 oz)
- Uses Standard 4-Cup Coffee Filter Packs – **Cuisinart In-Room Coffee Program Available**
- Brew Pause Feature for Mid-Cycle Pouring
- Keep-Warm Plate
- Automatic Shutoff
- Choose from Glass or Stainless Steel Carafes

See full specs for models WCM04B and WCM08B on page 35.

NEW CUISINART® Compact QuicKettle™

CK-5WWH – White
CK-5BKWH – Black

- **Quickly and Quietly Boils Water in Minutes**
- **One-Touch Operation**
- **Auto Shutoff Overheat and Boil-Dry Protection**
- **0.5-Liter Capacity**
- **Cordless Convenience – Lightweight Kettle Lifts Off Base for Easy Filling and Serving**
- **Concealed Heating Element to Prevent Mineral Buildup**

See full specs for models CK-5WWH and CK-5BKWH on page 35.

CUISINART® 1-Cup Coffeemaker

W1CM5

- Brews One Cup (8 oz.) in Less Than 4 minutes
- Uses Standard Single-Serve Coffee Pods – **Cuisinart In-Room Coffee Program Available**
- Environmentally Friendly – Reusable, Dishwasher-Safe Brew Basket
- Automatic Shutoff When Brew Cycle Is Complete

See full specs for model W1CM5 on page 36.

CUISINART® 1-Cup Stainless Coffeemaker

W1CM5S

- Upscale, Stainless Steel Finish
- Brews One Cup (8 oz.) in Less Than 4 Minutes
- Uses Standard Single-Serve Coffee Pods – **Cuisinart In-Room Coffee Program Available**
- Environmentally Friendly – Reusable, Dishwasher-Safe Brew Basket
- Automatic Shutoff When Brew Cycle Is Complete

See full specs for model W1CM5S on page 36.

clock radios

CONAIR™ Alarm Clock Radio with USB Charging Port

WCR14

- 2.0 Amp USB Charging Port Will Effectively Charge Tablets, Smartphones and Other Devices.
- Single-Day Alarm Feature
- Easy-To-Read 0.9" Display with Alarm ON/OFF and AM/PM Indicators
- AUX Jack for Playing Music from Personal Devices
- Snooze and Sleep Functions
- Digital FM Tuner
- Battery Backup (batteries not included)

See full specs for model WCR14 on page 36.

CONAIR™ Compact Alarm Clock Radio

WCR02

- Compact Size
- Easy-To-Read 0.6" Display with Alarm ON and AM/PM Indicators
- Single-Day Alarm Feature
- Snooze and Sleep Functions
- Digital FM Tuner
- Battery Backup (batteries not included)

See full specs for model WCR02 on page 37.

irons/steamer

CONAIR®
Full-Feature Steam and Dry Cord-Keeper™ Iron

WCI306R – White
WCI306RBK – Black

- Retractable Cord for Easy Storage and Neat Presentation
- Cord Access Window Allows for Easy Correction of Twisted Cords
- Anti-Drip Feature Helps to Eliminate Spills That Could Damage Guests' Garments
- Auto Shutoff – 30 Seconds Horizontal and 8 Minutes Vertical with Audible Tone and Easy Reset
- Sliding Water-Fill Cover
- Vertical and Burst of Steam
- Self-Cleaning Mode Helps to Remove Buildup and Extend Life
- Spray Button
- Choose from White or Black
- Storage Bag Available (BAG-IRON)

See full specs for models WCI306R and WCI306RBK on page 37.

CONAIR®
Full-Feature Steam and Dry Iron

WCI316

- Anti-Drip Feature Helps to Eliminate Spills That Could Damage Guests' Garments
- Auto Shutoff – 30 Seconds Horizontal and 8 Minutes Vertical with Audible Tone and Easy Reset
- Sliding Water-Fill Cover
- Vertical and Burst of Steam
- Self-Cleaning Mode Helps to Remove Buildup and Extend Life
- Spray Button
- Storage Bag Available (BAG-IRON)

See full specs for model WCI316 on page 37.

NEW CONAIR® Iron Storage Bag

BAG-IRON

- **Fits All Conair Hospitality Steam Irons**
- **Flame-Retardant Material**
- **Provides a Clean and Secure Storage Option**
- **Labeled on Three Sides for Easy Identification by Guests**
- **Protects the Steam Iron While Not in Use and Extends Life**
- **Sturdy Zipper Closure and Convenient Cord Storage**

See full specs for model BAG-IRON on page 37.

CONAIR® Compact Steam and Dry Iron

WCI205

- Compact Size for Easy Storage
- Auto Shutoff
- Sliding Water-Fill Cover
- See-Through Water-Tank
- Adjustable Temperature Control
- Storage Bag Available (BAG-IRON)

See full specs for model WCI205 on page 37.

NEW CONAIR® Handheld Steamer

GS23RWH

- Effective on All Types of Fabrics, Linens and Drapes
- Fast Heat-Up and 15-Minute Steam Time
- Energy-Saving Steam Pause
- Dual Heat Settings
- Steam Trigger with Continuous On Option
- Easy-to-Fill, Removable Water Reservoir

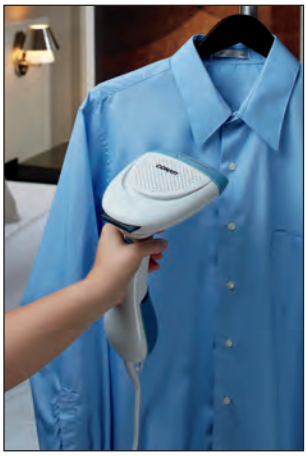

See full specs for model GS23RWH on page 38.

mirrors

RUSK
sensories
calm
RUSK
sensories
calm
RUSK
sensories
calm
ON
OFF
Conair

NEW CONAIR® Two-Sided LED Lighted Vanity Mirror

BE119WH

- Lifetime LED Lighting – Bulbs Never Have to be Replaced
- Satin Nickel Finish
- Standard and 5x Magnification
- 8.5 in. Diameter
- ON/OFF Rocker Switch
- Clear Power Cord
- Convenient Power Outlet on Base

See full specs for model BE119WH on page 38.

NEW CONAIR® LED Lighted Vanity Mirror

BE50LBCHW

- Lifetime LED Lighting – Bulbs Never Have to be Replaced
- Sleek Black Chrome Finish with Slim Profile
- 5x Magnification
- 9 in. Diameter with 7 in. Viewing Area
- Adjustable Head Tilts Back and Forward
- ON/OFF Push Button on Base
- Clear Power Cord

See full specs for model BE50LBCHW on page 38.

NEW CONAIR® Two-Sided Lighted Vanity Mirror

BE103WH

- Satin Nickel Finish
- Standard and 5x Magnification
- 8.5 in. Diameter
- Circular Lighting with Four Settings
- Clear Power Cord
- Convenient Power Outlet on Base

See full specs for model BE103WH on page 39.

NEW CONAIR® Non-Lighted Vanity Mirror

41518W

- Polished Chrome Finish
- Two Sided
- Standard and 5x Magnification
- 8 in. Diameter

See full specs for model 41518W on page 39.

CONAIR® Non-Lighted Wall-Mount Mirror

41741W

- Polished Chrome Finish
- Two Sided
- Standard and 5x Magnification
- 8 in. Diameter
- Adjust to Any Angle for Easy Viewing
- Easy to Mount – Hardware Included

See full specs for model 41741W on page 39.

CONAIR® Lighted Wall-Mount Mirror

BE8WMBW

- Polished Chrome Finish
- 5x Magnification
- 8 in. Diameter
- Extendable Arm and Clear Cord
- Easy to Mount – Hardware Included

See full specs for model BE8WMBW on page 39.

THINNER® Digital Glass Scale

MS-8140WH – Chrome

- **Polished Chrome Frame**
- **Tempered Safety Glass**
- **4-Digit 0.9" Digital Display**
- **330 lb. Capacity**

See full specs for model MS-8140WH on page 39.

THINNER® Digital Glass Scale

MS-8012W

- Polished Chrome Frame
- Tempered Safety Glass
- Reads in Both Lbs. and Kg
- 4-Digit, 1.3 in. Digital Display
- 330 lb. Capacity

See full specs for model MS-8012W on page 39.

THINNER® Speedometer Scale

MS-9560W

- Matte Silver Finish
- Easy to Read, 4.5 in. Rotary Display
- Slip-Resistant Platform
- 350 lb. Capacity

See full specs for model MS-9560W on page 40.

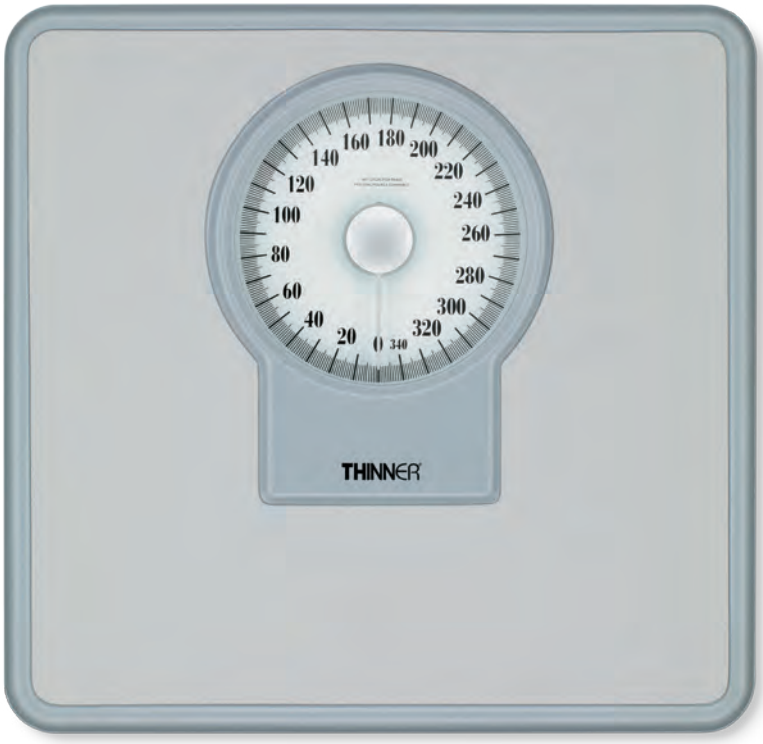

extended stay

CUISINART®
PowerBlend 600™ Blender

SPB-10CHW

- Polished Chrome Finish
- Large 56 oz. Glass Blending Jar
- Clear 2 oz. Measure Pour Lid
- 7-Speed Touchpad Controls with LED Indicators: Off, On, Pulse, Stir, Chop, Mix, Purée, Liquefy and Ice Crush
- All Removable Parts Are Dishwasher Safe
- Convenient Push-In Cord Storage

See full specs for model SPB-10CHW on page 40.

CUISINART®
SmartPower® Deluxe Blender

SPB-600WH

- Die-cast Metal Housing
- 48 oz. Glass Blender Jar
- Tight-Seal Lid with 2 oz. Measure Pouring Cap Insert
- Sleek 4-Speed Electronic Touchpad Controls with Blue Indicators: High, Low, Pulse and Ice Crush
- Ultra-Sharp Stainless Steel Blade

See full specs for model SPB-600WH on page 40.

CUISINART® 12-Cup Programmable Coffeemaker

DCC-1100W – White
DCC-1100BKW – Black

- Classic Design with Stainless Accents
- 12-Cup Carafe with Ergonomic Handle, Dripless Spout and Knuckle Guard
- Keep Warm Heating Plate
- Fully Automatic with 24-Hour Programmability
- Self-Clean and 1- to 4-Cup Settings
- Brew Pause Feature Lets Guests Enjoy a Cup of Coffee Before Brewing Has Finished
- Programmable Auto Shutoff Feature
- Available in White or Black

See full specs for models DCC-1100W and DCC1100BKW on page 41.

CUISINART® 10-Cup Programmable Coffeemaker

DCC-1150BKW

- Classic Design with Stainless Accents
- 10-Cup, Double-Wall Insulated Thermal Carafe
- Fully Automatic with 24-Hour Programmability
- Self-Clean and 1- to 4-Cup Settings
- Brew Pause Feature Lets Guests Enjoy a Cup of Coffee Before Brewing Has Finished
- Automatically Shuts Off When Brewing Is Complete

See full specs for model DCC-1150BKW on page 41.

CUISINART® 2-Slice Classic Metal Toaster

CPT-160WH

- Smooth Brushed Stainless Housing with Polished Chrome and Black Accents
- Browning Control Dial
- Reheat, Defrost and Bagel Controls with LED Indicators
- 1½-in. Wide Toasting Slots
- Slide-Out Crumb Tray
- Convenient Cord Wrap

See full specs for model CPT-160WH on page 41.

CUISINART® Dishwasher-Safe Cookware

- Hard Anodized Exterior for Superior Durability
- Convenience of Dishwasher Cleanup
- Nonstick Cooking Surface
- Even Heat Distribution
- Oven Safe to 500 Degrees
- Ergonomic Handles

DSA22-20WH – 8 Inch Skillet

DSA22-24WH – 10 Inch Skillet

DSA19-14WH – 1 Quart Saucepan with Tempered Glass Cover (not shown)

DSA19-18PWH – 2 Quart Pour Saucepan with Tempered Glass Cover

DSA66-22WH – 6 Quart Stockpot with Tempered Glass Cover

CUISINART® 2-Slice Compact Stainless Toaster

CPT-320WH

- Compact Design
- Stainless Steel Construction
- Browning Control Dial
- Reheat, Defrost and Bagel Controls
- 1½-Inch Wide Toasting Slots
- Slide Out Crumb Tray
- Convenient Cord Wrap

See full specs for model CPT-320WH on page 41.

CUISINART® 2-Slice Compact Plastic Toaster

CPT-122WH

- Compact Design
- Stainless Steel Accents
- Browning Control Dial
- Reheat, Defrost and Bagel Controls
- 1½-in. Wide Toasting Slots
- Slide-Out Crumb Tray
- Convenient Cord Wrap

See full specs for model CPT-122WH on page 41.

WARING
COMMERCIAL
DOUBLE BELGIAN
WAFFLEMAKER
POWER
ON
OFF

As a leader in professional kitchen equipment for the food service industry, Waring® Commercial's wide range of high-performance products is a great choice for the hospitality market. From toasters and waffle makers for breakfast buffets and concierge lounges to food processors, blenders and convection ovens for full or limited service hotel bars and kitchens, Waring® Commercial continues to set the standard for industry excellence.

To learn more and browse our complete product selection, visit
www.waringcommercialproducts.com

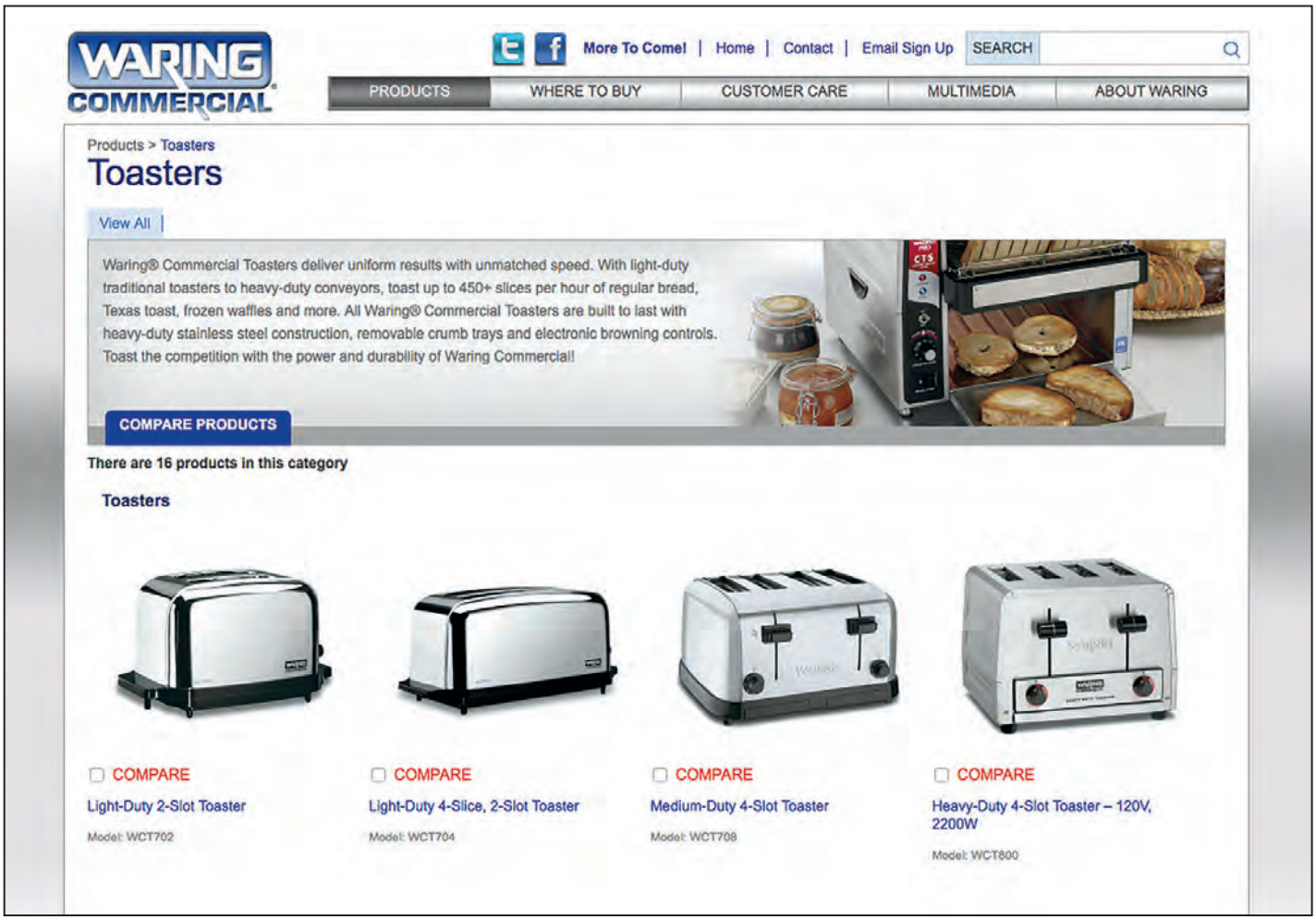

product specifications

575WH

Master Pack: 2

Case Dimensions:
12.5" x 8.5" x 10.75"

Case Weight: 5 lbs.

Case Cube: 0.66 cu.ft.

Product UPC:
040072074493

Product MBC:
10040072074490

3QHW

Master Pack: 2

Case Dimensions:
10.25" x 13.5" x 8.62"

Case Weight: 5.2 lbs.

Case Cube: 0.69 cu.ft.

Product UPC:
040072039737

Product MBC:
10040072039734

294WH

Master Pack: 4

Case Dimensions:
15.625" x 10.75" x 12.5"

Case Weight: 10 lbs.

Case Cube: 1.21 cu.ft.

Product UPC:
040072073038

Product MBC:
10040072073035

425WWH

Master Pack: 4

Case Dimensions:
15.875" x 10" x 12.125"

Case Weight: 7.8 lbs.

Case Cube: 1.11 cu.ft.

Product UPC:
040072073564

Product MBC:
10040072073561

229BKWH

Master Pack: 4

Case Dimensions:
15" x 9.875" x 10.375"

Case Weight: 7.2 lbs.

Case Cube: 0.88 cu.ft.

Product UPC:
040072073380

Product MBC:
10040072073387

425BKWH

Master Pack: 4

Case Dimensions:
15.875" x 10" x 12.125"

Case Weight: 7.8 lbs.

Case Cube: 1.11 cu.ft.

Product UPC:
040072073625

Product MBC:
10040072073622

141WRW

Master Pack: 4

Case Dimensions:
16.25" x 9.75" x 12"

Case Weight: 9.2 lbs.

Case Cube: 1.1 cu.ft.

Product UPC:
040072004858

Product MBC:
10040072004855

229WWH

Master Pack: 4

Case Dimensions:
15" x 9.875" x 10.375"

Case Weight: 7.2 lbs.

Case Cube: 0.88 cu.ft.

Product UPC:
040072073618

Product MBC:
10040072073615

070RACHNW

Master Pack: 4

Case Dimensions:
16" x 9.5" x 11"

Case Weight: 8 lbs.

Case Cube: 0.97 cu.ft.

Product UPC:
040072005008

Product MBC:
10040072005005

product specifications

169CHIW

Master Pack: 4

Case Dimensions:
10.25" x 8.875" x 14"

Case Weight: 7.9 lbs.

Case Cube: 0.73 cu.ft.

Product UPC:
040072010439

Product MBC:
10040072010436

Folded Height – 6"

169WIW

Master Pack: 4

Case Dimensions:
10.25" x 8.875" x 14"

Case Weight: 7.8 lbs.

Case Cube: 0.73 cu.ft.

Product UPC:
040072014451

Product MBC:
10040072014458

Folded Height – 6"

169BIW

Master Pack: 4

Case Dimensions:
10.25" x 8.875" x 14"

Case Weight: 7.8 lbs.

Case Cube: 0.73 cu.ft.

Product UPC:
040072014444

Product MBC:
10040072014441

Folded Height – 6"

152B

Master Pack: 4

Case Dimensions:
15.875" x 8.25" x 10.25"

Case Weight: 6.5 lbs.

Case Cube: 0.78 cu.ft.

Product UPC:
074108019776

Product MBC:
10074108019773

247W

Master Pack: 4

Case Dimensions:
13.5" x 10" x 8.25"

Case Weight: 5.6 lbs.

Case Cube: 0.65 cu.ft.

Product UPC:
040072013409

Product MBC:
10040072013406

Intertek

047W

Master Pack: 4

Case Dimensions:
13.5" x 10" x 8.25"

Case Weight: 5.6 lbs.

Case Cube: 0.65 cu.ft.

Product UPC:
040072014932

Product MBC:
10040072014939

Intertek

247BW

Master Pack: 4

Case Dimensions:
13.5" x 10" x 8.25"

Case Weight: 5.6 lbs.

Case Cube: 0.65 cu.ft.

Product UPC:
040072013393

Product MBC:
10040072013390

Intertek

047BW

Master Pack: 4

Case Dimensions:
13.5" x 10" x 8.25"

Case Weight: 5.6 lbs.

Case Cube: 0.65 cu.ft.

Product UPC:
040072014949

Product MBC:
10040072014946

Intertek

134BW

Master Pack: 4

Case Dimensions:
11.5" x 9.5" x 13.5"

Case Weight: 10.2 lbs.

Case Cube: 0.85 cu.ft.

Product UPC:
040072003738

Product MBC:
10040072003735

product specifications

134W

Master Pack: 4

Case Dimensions:
11.5" x 9.5" x 13.5"

Case Weight: 10.2 lbs.

Case Cube: 0.85 cu.ft.

Product UPC:
040072001697

Product MBC:
10040072001694

136W

Master Pack: 4

Case Dimensions:
11.5" x 9.5" x 13.5"

Case Weight: 10.2 lbs.

Case Cube: 0.85 cu.ft.

Product UPC:
040072001772

Product MBC:
10040072001779

BAG-HOSP (DRYER STORAGE BAG)

Master Pack: 100

Case Dimensions:
13" x 11.25" x 8.25"

Case Weight: 8.6 lbs.

Case Cube: 0.69 cu.ft.

Product UPC:
040072010477

Product MBC:
10040072010474

WCM11

Master Pack: 6

Case Dimensions:
22.75" x 17.5" x 12"

Case Weight: 17.8 lbs.

Case Cube: 2.76 cu.ft.

Product UPC:
040072004629

Product MBC:
10040072004626

Approved for Commercial Use

WCM08B

Master Pack: 4

Case Dimensions:
18" x 14.25" x 12.25"

Case Weight: 17.8 lbs.

Case Cube: 1.82 cu.ft.

Product UPC:
040072001260

Product MBC:
10040072001267

Approved for Hospitality Use

WCM11S

Master Pack: 6

Case Dimensions:
22.75" x 17.5" x 12"

Case Weight: 18.2 lbs.

Case Cube: 2.76 cu.ft.

Product UPC:
040072010743

Product MBC:
1040072010740

Approved for Commercial Use

CK-5WWH

Master Pack: 4

Case Dimensions:
15" x 14.25" x 13.625"

Case Weight: 8 lbs.

Case Cube: 1.685 cu.ft.

Product UPC:
040072072727

Product MBC:
10040072072724

Approved for Hospitality Use

WCM04B

Master Pack: 4

Case Dimensions:
18" x 14.25" x 12.25"

Case Weight: 17.8 lbs.

Case Cube: 1.82 cu.ft.

Product UPC:
040072602696

Product MBC:
10040072602693

Approved for Hospitality Use

CK-5BKWH

Master Pack: 4

Case Dimensions:
15" x 14.25" x 13.625"

Case Weight: 8 lbs.

Case Cube: 1.685 cu.ft.

Product UPC:
040072072710

Product MBC:
10040072072717

Approved for Hospitality Use

product specifications

W1CM5

Master Pack: 6

Case Dimensions:
22" x 15" x 11.5"

Case Weight: 13.8 lbs.

Case Cube: 2.1 cu.ft.

Product UPC:
040072006289

Product MBC:
10040072006286

Approved for Commercial Use

W1CM5S

Master Pack: 6

Case Dimensions:
22" x 15" x 11.5"

Case Weight: 14 lbs.

Case Cube: 2.1 cu.ft.

Product UPC:
040072009952

Product MBC:
10040072009959

Approved for Commercial Use

WCR14

Master Pack: 8

Case Dimensions:
15.25" x 9.75" x 7.75"

Case Weight: 8.8 lbs.

Case Cube: 0.667 cu.ft.

Product UPC:
040072033001

Product MBC:
10040072033008

Intertek

WCR02

Master Pack: 12

Case Dimensions:
12.6" x 8" x 12.5"

Case Weight: 11.4 lbs.

Case Cube: 0.73 cu.ft.

Product UPC:
040072025013

Product MBC:
10040072025010

WCI316

Master Pack: 6

Case Dimensions:
15.875" x 12.125" x 12.875"

Case Weight: 20.25 lbs.

Case Cube: 1.435 cu.ft.

Product UPC:
040072025006

Product MBC:
10040072025003

WCI306R

Master Pack: 6

Case Dimensions:
15.875" x 12.125" x 12.875"

Case Weight: 20.25 lbs.

Case Cube: 1.435 cu.ft.

Product UPC:
040072019357

Product MBC:
10040072019354

BAG-IRON

Master Pack: 12

Case Dimensions:
24.75" x 18.75" x 12.75"

Case Weight: 7.2 lbs.

Case Cube: 3.424 cu.ft.

Product UPC:
040072072802

Product MBC:
10040072072809

WCI306RBK

Master Pack: 6

Case Dimensions:
15.875" x 12.125" x 12.875"

Case Weight: 20.25 lbs.

Case Cube: 1.435 cu.ft.

Product UPC:
040072019340

Product MBC:
10040072019347

WCI205

Master Pack: 6

Case Dimensions:
14.375" x 10.875" x 10.75"

Case Weight: 14.4 lbs.

Case Cube: 0.97 cu.ft.

Product UPC:
040072001277

Product MBC:
10040072001274

product specifications

GS23RWH

Master Pack: 2

Case Dimensions:
12" x 8.375" x 14"

Case Weight: 6.8 lbs.

Case Cube: 0.815 cu.ft.

Product UPC:
040072071829

Product MBC:
10040072071826

BE119WH

Master Pack: 4

Case Dimensions:
20.25" x 15.75" x 17.5"

Case Weight: 18.8 lbs.

Case Cube: 3.23 cu.ft.

Product UPC:
040072071539

Product MBC:
10040072071536

BE50LBCHW

Master Pack: 4

Case Dimensions:
20.5" x 17.125" x 16.375"

Case Weight: 16.2 lbs.

Case Cube: 3.327 cu.ft.

Product UPC:
040072070518

Product MBC:
10040072070515

BE103WH

Master Pack: 4

Case Dimensions:
20.25" x 15.75" x 17.5"

Case Weight: 18.8 lbs.

Case Cube: 3.23 cu.ft.

Product UPC:
040072071546

Product MBC:
10040072071543

BE8WMBW

Master Pack: 4

Case Dimensions:
20" x 13.3" x 12.25"

Case Weight: 19.4 lbs.

Case Cube: 1.89 cu.ft.

Product UPC:
040072002076

Product MBC:
10040072002073

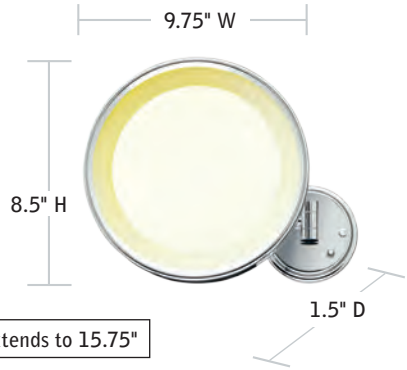

41518W

Master Pack: 3

Case Dimensions:
21.375" x 11.375" x 16.875"

Case Weight: 10.3 lbs.

Case Cube: 2.37 cu.ft.

Product UPC:
040072074509

Product MBC:
10040072074506

MS-8140WH

Master Pack: 4

Case Dimensions:
13.75" x 11" x 12.75"

Case Weight: 20.6 lbs.

Case Cube: 1.1 cu.ft.

Product UPC:
040072004469

Product MBC:
10040072004466

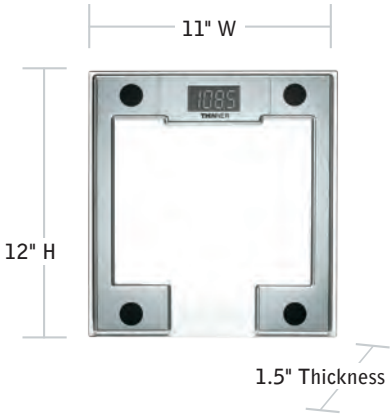

41741W

Master Pack: 6

Case Dimensions:
13" x 11.25" x 14.25"

Case Weight: 15.4 lbs.

Case Cube: 1.21 cu.ft.

Product UPC:
040072001857

Product MBC:
10040072001854

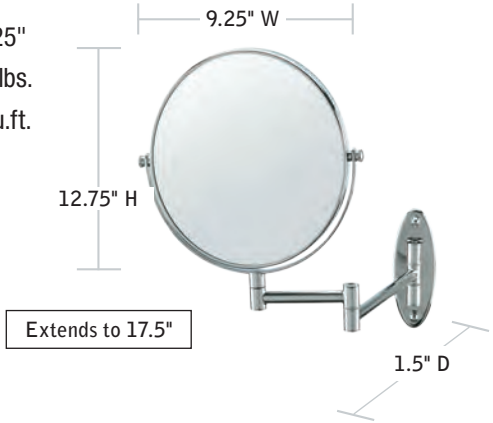

MS-8012W

Master Pack: 4

Case Dimensions:
13" x 11.75" x 13.75"

Case Weight: 21 lbs.

Case Cube: 1.22 cubic feet

Product UPC:
040072005879

Product MBC:
10040072005876

product specifications

MS-9560W

Master Pack: 4

Case Dimensions:
16" x 13" x 13.75"

Case Weight: 21.8 lbs.

Case Cube: 1.66 cu.ft.

Product UPC:
040072005428

Product MBC:
10040072005425

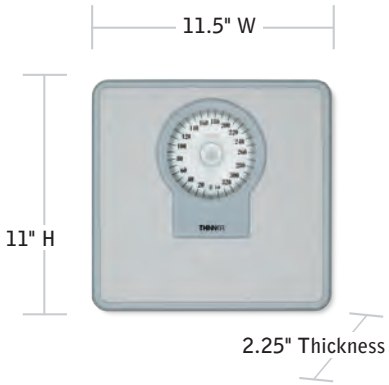

SPB-10CHW

Master Pack: 2

Case Dimensions:
16.5" x 15.37" x 11.37"

Case Weight: 20 lbs.

Case Cube: 1.67 cu.ft.

Product UPC:
86279013736

Product MBC:
30086279013737

SPB-600WH

Master Pack: 2

Case Dimensions:
16.12" x 14.62" x 10.75"

Case Weight: 20 lbs.

Case Cube: 1.46 cu.ft.

Product UPC:
040072022616

Product MBC:
10040072022613

DCC-1100W

Master Pack: 2

Case Dimensions:
20.25" x 17" x 10.5"

Case Weight: 14 lbs.

Case Cube: 2.09 cu.ft.

Product UPC:
040072019326

Product MBC:
10040072019323

DCC-1100BKW

Master Pack: 2

Case Dimensions:
20.25" x 17" x 10.5"

Case Weight: 14 lbs.

Case Cube: 2.09 cu.ft.

Product UPC:
040072019319

Product MBC:
10040072019316

DCC-1150BKW

Master Pack: 2

Case Dimensions:
20" x 17" x 10.25"

Case Weight: 15.2 lbs.

Case Cube: 2.01 cu.ft.

Product UPC:
086279017376

Product MBC:
50086279017371

CPT-160WH

Master Pack: 4

Case Dimensions:
17" x 17" x 12.25"

Case Weight: 18.2 lbs.

Case Cube: 2.04 cu.ft.

Product UPC:
086279003751

Product MBC:
80086279003757

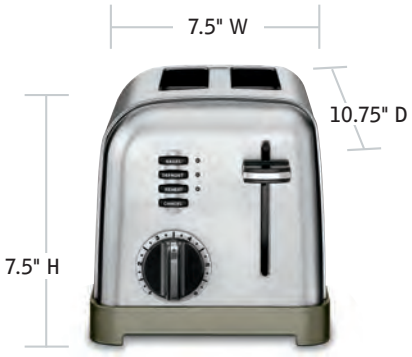

CPT-320WH

Master Pack: 4

Case Dimensions:
17.37" x 18.25" x 13"

Case Weight: 18.4 lbs.

Case Cube: 2.38 cu.ft.

Product UPC:
040072047930

Product MBC:
10040072047937

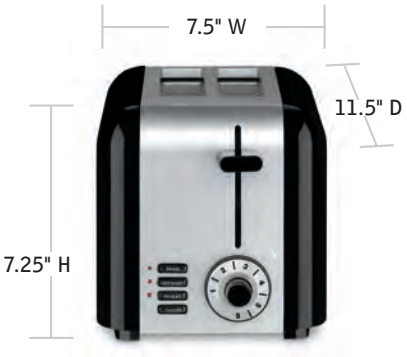

CPT-122WH

Master Pack: 4

Case Dimensions:
16" x 17.75" x 12.75"

Case Weight: 16.65 lbs.

Case Cube: 2.09 cu.ft.

Product UPC:
040072058349

Product MBC:
10040072058346

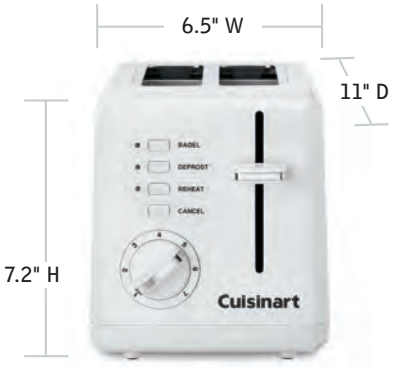

CONAIR®

HOSPITALITY

© 2017 Conair Corporation

314 Ella T. Grasso Avenue • Torrington, Connecticut 06790
Tel. (800) 492-7464 • Fax. (860) 496-9017
www.conairhospitality.com
email: hospitality@conair.com

16WH024269 PG-36345